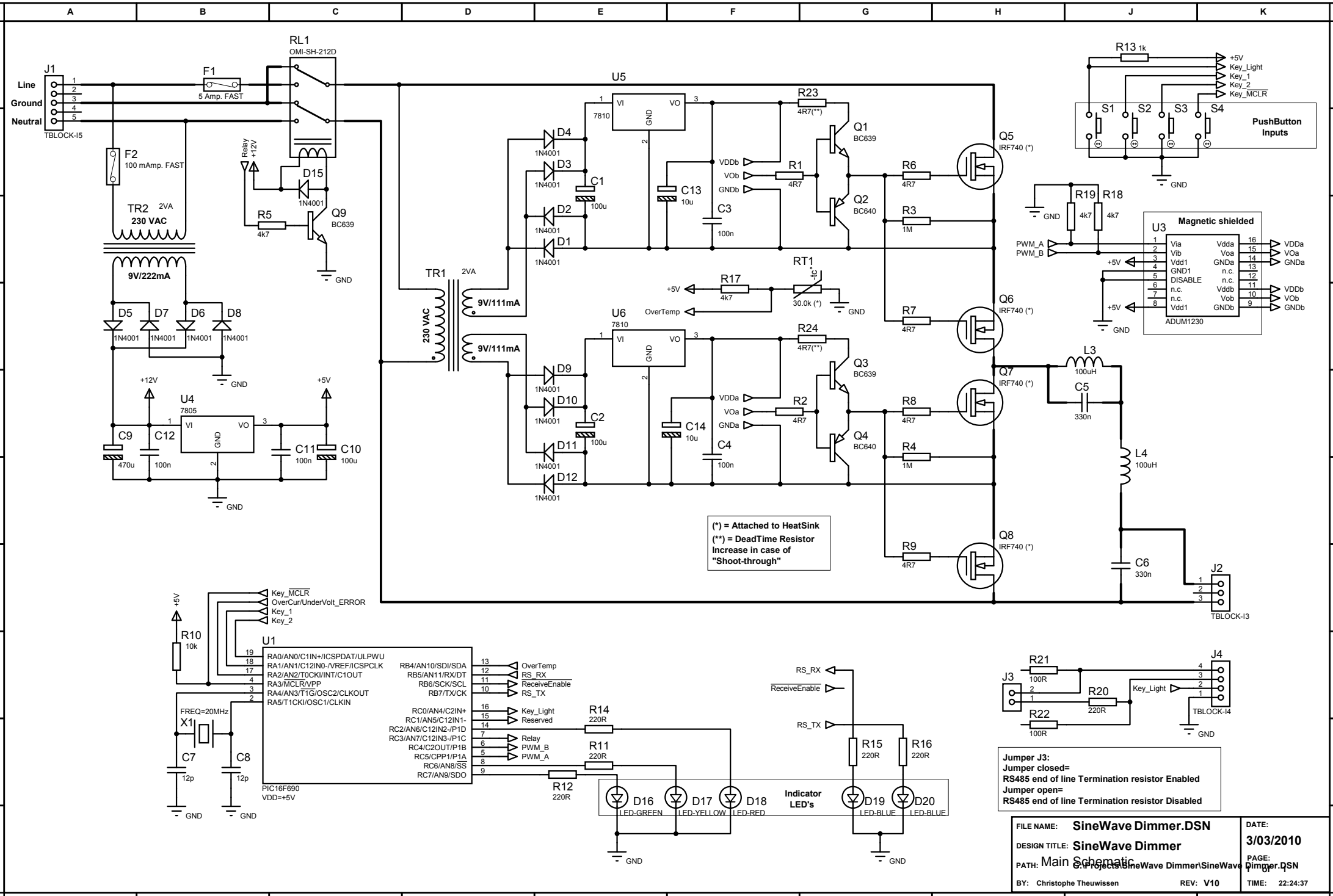
J1
Line
Ground
Neutral
TBLOCK-I5
F1
5 Amp. FAST
F2
100 mAmp. FAST
RL1
OMI-SH-212D
Relay +12V
D15
1N4001
R5
4k7
Q9
BC639
GND
TR2
2VA
230 VAC
9V/222mA
D5
D7
D6
D8
1N4001
+12V
+5V
U4
7805
VI
VO
GND
C9
470u
C12
100n
C11
100n
C10
100u
U5
7810
D4
D3
D2
D1
C1
100u
C13
10u
C3
100n
R23
4R7(**)
Q1
BC639
Q2
BC640
VDDb
VOb
GNDb
R1
4R7
R6
4R7
R3
1M
Q5
IRF740 (*)
TR1
230 VAC
9V/111mA
9V/111mA
R17
4k7
RT1
30.0k (*)
OverTemp
U6
7810
D9
D10
D11
D12
C2
100u
C14
10u
C4
100n
R24
4R7(**)
Q3
BC639
Q4
BC640
VDDa
VOa
GNDa
R2
4R7
R7
4R7
R8
4R7
R4
1M
Q6
IRF740 (*)
Q7
IRF740 (*)
Q8
IRF740 (*)
R9
4R7
L3
100uH
C5
330n
L4
100uH
C6
330n
J2
TBLOCK-I3
(*) = Attached to HeatSink
(**) = DeadTime Resistor Increase in case of "Shoot-through"
R13 1k
+5V
Key_Light
Key_1
Key_2
Key_MCLR
S1
S2
S3
S4
PushButton Inputs
R19
4k7
R18
4k7
U3
Magnetic shielded
PWM_A
PWM_B
Via
Vib
Vdd1
GND1
DISABLE
n.c.
Vdda
Voa
GNDa
Vddb
Vob
GNDb
ADUM1230
VDDa
VOa
GNDa
VDDb
VOb
GNDb
Key_MCLR
OverCur/UnderVolt_ERROR
Key_1
Key_2
R10
10k
U1
RA0/AN0/C1IN+/ICSPDAT/ULPWU
RA1/AN1/C12IN0-/VREF/ICSPCLK
RA2/AN2/T0CKI/INT/C1OUT
RA3/MCLR/VPP
RA4/AN3/T1G/OSC2/CLKOUT
RA5/T1CKI/OSC1/CLKIN
RB4/AN10/SDI/SDA
RB5/AN11/RX/DT
RB6/SCK/SCL
RB7/TX/CK
RC0/AN4/C2IN+
RC1/AN5/C12IN1-
RC2/AN6/C12IN2-/P1D
RC3/AN7/C12IN3-/P1C
RC4/C2OUT/P1B
RC5/CPP1/P1A
RC6/AN8/SS
RC7/AN9/SDO
OverTemp
RS_RX
ReceiveEnable
RS_TX
Key_Light
Reserved
Relay
PWM_B
PWM_A
FREQ=20MHz
X1
C7
12p
C8
12p
PIC16F690
VDD=+5V
R14
220R
R11
220R
R12
220R
D16
LED-GREEN
D17
LED-YELLOW
D18
LED-RED
Indicator LED's
D19
LED-BLUE
D20
LED-BLUE
R15
220R
R16
220R
J3
R21
100R
R20
220R
R22
100R
J4
TBLOCK-I4
Jumper J3:
Jumper closed=
RS485 end of line Termination resistor Enabled
Jumper open=
RS485 end of line Termination resistor Disabled
FILE NAME: SineWave Dimmer.DSN
DESIGN TITLE: SineWave Dimmer
PATH: C:\Projects\SineWave Dimmer\SineWave Dimmer.DSN
BY: Christophe Theuwissen
REV: V10
DATE: 3/03/2010
PAGE: 1 of 1
TIME: 22:24:37