SCHEMATIC DIAGRAM

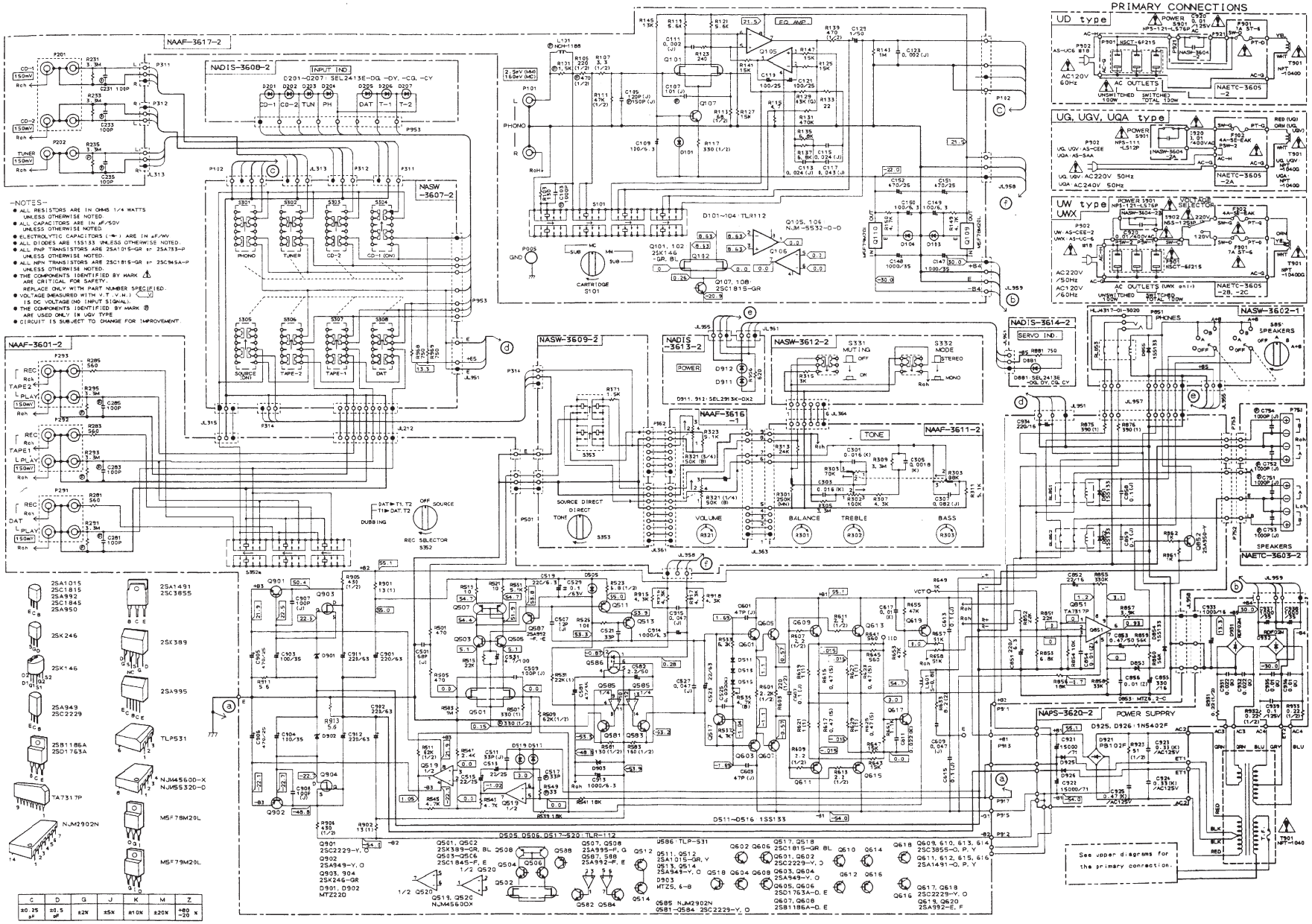

ONKYO CORPORATION